P.E. Guerin
ESTABLISHED - 1857

PIVOT HINGE FOR 2 ¼" DOOR THICKNESS

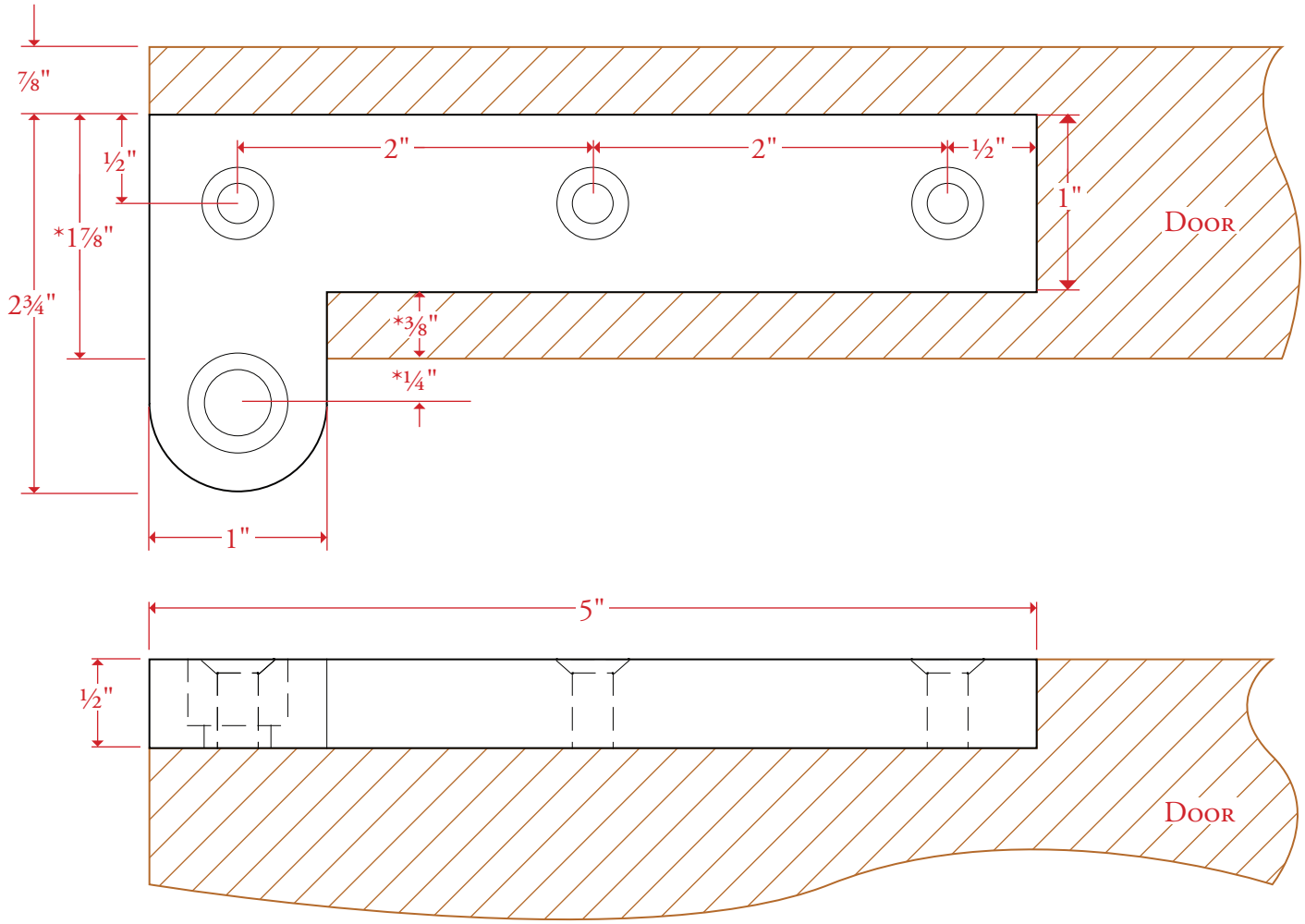

*Maintain

All measurements are in inches unless otherwise noted. Drawing not to scale. Please do not scale drawing.
Template is for reference only, not mortising purposes. All field cutting and fitting should be done with physical hardware.

23 JANE STREET, NEW YORK, NY 10014 +1 212 243 5270 PEGUERIN.COM
NEW YORK | CHICAGO | SAN FRANCISCO | LOS ANGELES | DALLAS | PALM BEACH